ADC Lab Logbook

Part 3 | Section 2: Common Emitter Amplifiers

Section 2: Common Emitter Amplifiers

Aim

To investigate the biasing, voltage gain, input impedance, and temperature stability of a BJT common emitter (CE) amplifier, with and without emitter degeneration.

Part A: Basic CE Amplifier (No Emitter Degeneration)

Biasing — Estimating R_{B3}

The target quiescent collector voltage is $V_C = 2.5$ V with $V_{CC} = 5$ V and $R_C = 10$ kΩ. This sets $I_C = 0.25$ mA. Assuming $V_{BE} \approx 0.66$ V for silicon BJTs and applying KCL at the base node:

$$(5 - 0.66) / 220k = I_B + 0.66 / (R_{B3} + 27k)$$

Solving for β in the range 200–450 gives R_{B3} between 9.07 kΩ (β = 200) and 7.77 kΩ (β = 450).

After assembling the circuit (without capacitors), RΛ3 was adjusted until $V_C = 2.5$ V. The measured value was **R_{B3} = 6.87 kΩ**.

Classification	A	B	C
h_{FE}	110 ~ 220	200 ~ 450	420 ~ 800

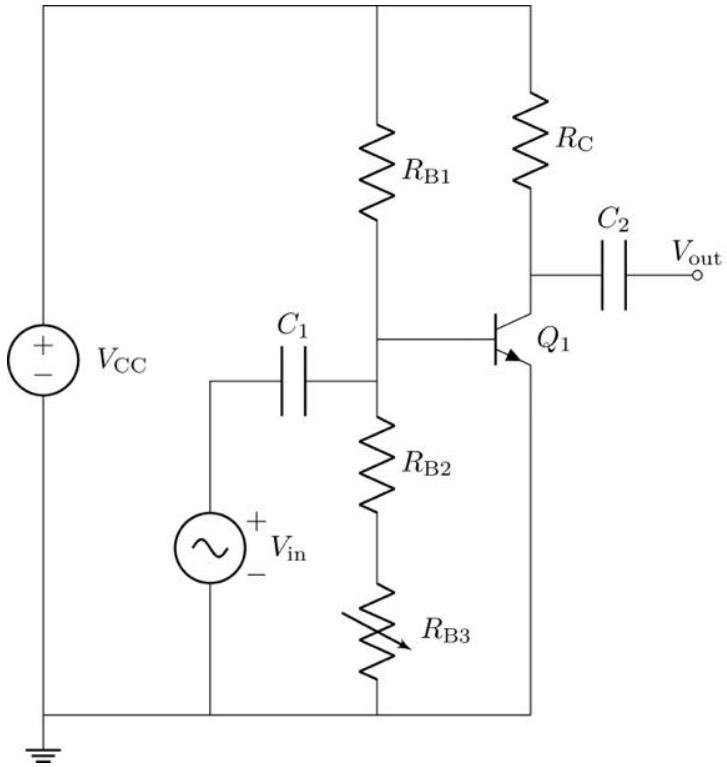

Temperature Sensitivity

When the BJT was held between fingers, its temperature increased and V_C dropped from 2.5 V to approximately 2.0 V. This occurs because elevated temperature increases I_C at constant V_{BE}, and since $V_C = V_{CC} - I_C \cdot R_C$, a higher I_C reduces V_C. The circuit has no emitter degeneration to counteract this effect.

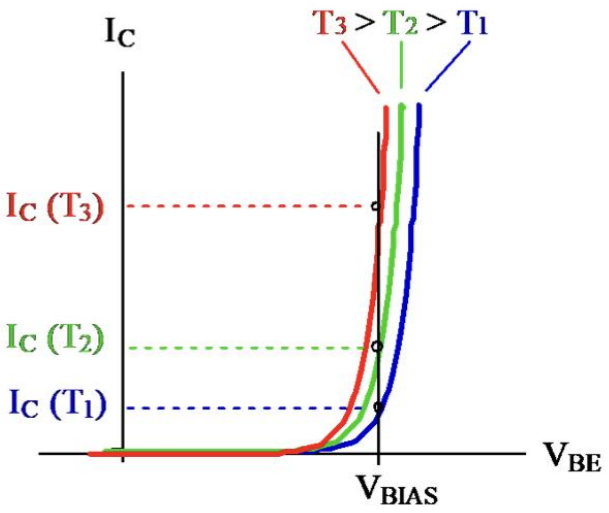

Amplifier Performance — Triangle Wave (1 kHz, 5 mV effective input)

A 1 kHz triangle wave was applied. Since the oscilloscope signal generator minimum amplitude (60 mV) exceeded the required 5 mV, a resistive voltage divider (1 kΩ in series with 11 kΩ) was used to attenuate the signal by a factor of 12, giving an effective input of approximately 5 mV. The output amplitude was significantly larger than the input, confirming amplification.

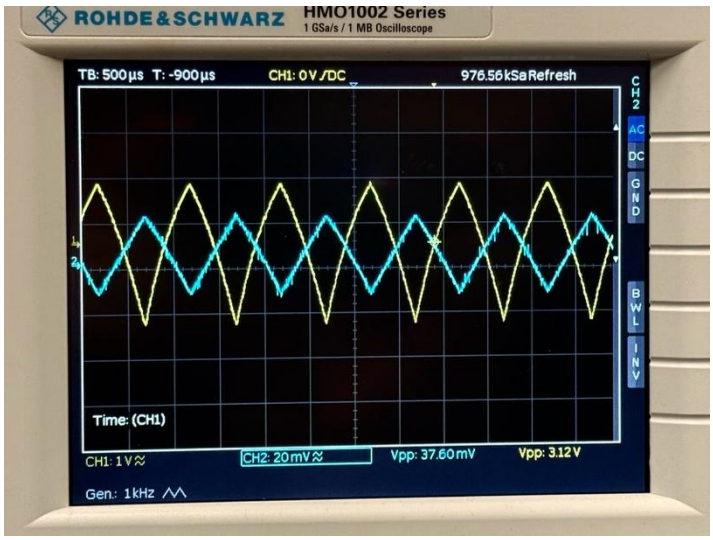

Maximum Input Amplitude Before Distortion

The input amplitude was increased until output distortion was first observed. The maximum generator amplitude was 160 mV, corresponding to a circuit input of 160/12 ≈ 13.3 mV.

Distortion arises because the BJT has a non-linear V_{in}–I_C characteristic: the incremental gain $g = I_C/V_T$ varies across the operating range. For large input swings, different parts of the signal cycle experience different gains, causing the triangle wave to lose its straight edges and become curved.

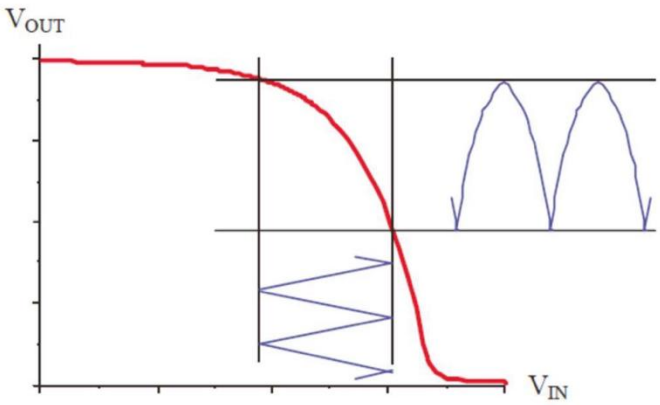

Effect of Adjusting the Bias Point ($V_C \neq 2.5$ V)

When R_{B3} was adjusted to move V_C away from the midpoint (2.5 V), the voltage gain decreased and the output triangle wave developed flat-topped clipping as the signal drove the transistor towards saturation or cut-off asymmetrically.

Voltage Gain (Sine Wave, 1 kHz)

Switching to a sine wave and using the oscilloscope automeasure function:

- **V_{out} (peak-to-peak):** 1.70 mV
- **V_{in} (peak-to-peak):** 15.60 mV
- $\Longrightarrow$ Voltage gain $A_V = V_{out}/V_{in} \approx 109$

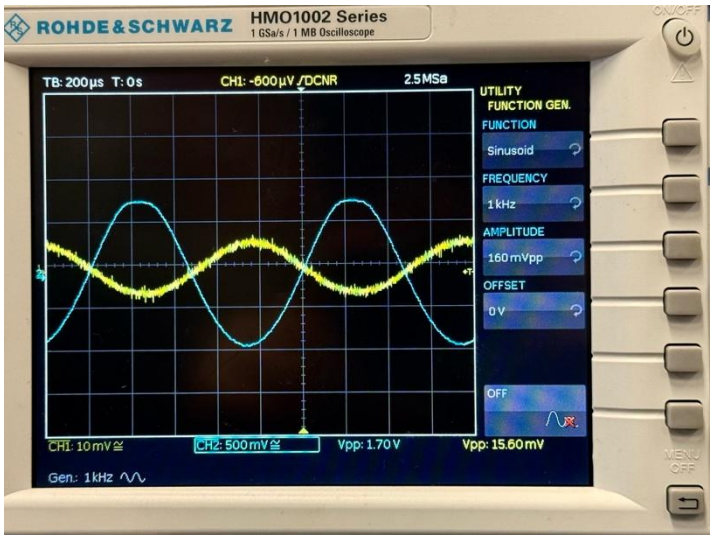

Input Impedance

A 10 kΩ resistor R was inserted in series with the amplifier input. The output fell from $V_{out1} = 1.7$ V to $V_{out2} = 1$V.

Using the ratio:

$$V_{out1} = V_{out2} \cdot (1 + 10k / R_{in})$$

$$R_{in} = 10k / (V_{out1} / V_{out2} - 1) \approx 13\ k\Omega$$

Part B: CE Amplifier with Emitter Degeneration (R_E = 2 kΩ)

Circuit Modification

A 2 kΩ emitter resistor R_E was added in series with the emitter, and R_{B2} was replaced with 56 kΩ. The capacitors were temporarily removed to re-bias the circuit.

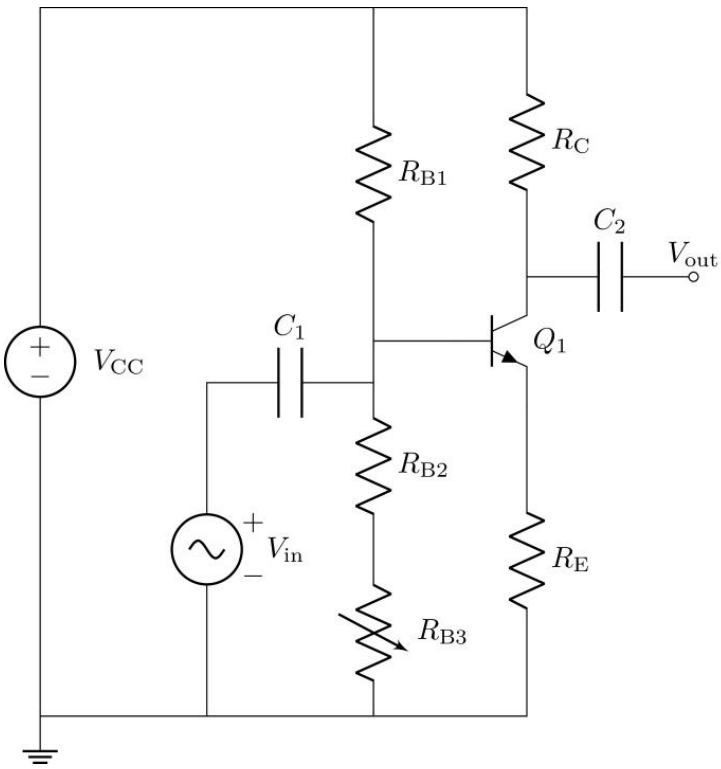

Biasing — Estimating R_{B3}

With R_E in circuit, the emitter voltage $V = I_E \cdot R_E$ is non-zero. Applying KCL at node B with I_C = 0.25 mA, V_{BE} = 0.66 V, and letting $\alpha = \beta/(\beta+1)$:

$$(5 - (0.66 + 0.5(1+1/\beta))) / 220k = 0.66 + 0.5(1+1/\beta) / (R_{B3} + 56k) + (1/\beta) \cdot 0.25m$$

For β = 200: R_{B3} = 15.2 kΩ; for β = 450: R_{B3} = 12.7 kΩ. Starting from 13 kΩ, the actual measured value for V_C = 2.5 V was **R_{B3} = 12.3 kΩ**.

Temperature Sensitivity with Emitter Degeneration

Touching the BJT now caused V_C to change by only 0.05 V (from 2.50 V to 2.55 V), in contrast to the 0.5 V shift observed without R_E.

Theoretical explanation: with R_E in circuit, $V_B = V_{BE} + V_E$ is held approximately constant by the stiff biasing network. Since:

$$V_C = V_{CC} - \alpha \cdot V_E \cdot (R_C/R_E) \implies \Delta V_C/\Delta V_B = -\alpha \cdot R_C/R_E$$

This ratio depends only on the resistor values, not on temperature-dependent parameters (β, I_S, V_T). Therefore the bias point is approximately independent of temperature.

Gain and Amplitude with Emitter Degeneration (no bypass capacitor)

- **Voltage gain:** $A_V \approx 4$ (greatly reduced compared to 109 without R_E)
- **Maximum output amplitude:** Unchanged (same clipping limits)

The gain reduction occurs because R_E introduces negative feedback: a fraction of the output signal is

fed back to the emitter, opposing the input. The effective small-signal gain is approximately $-R_C/(R_E + 1/g\quad) \approx -R_C/R_E = -10k/2k = -5$, consistent with the measured value of 4.

Adding a Bypass Capacitor (10 µF) in Parallel with R_E

- **Voltage gain with bypass capacitor:** $A_V \approx 73.7$
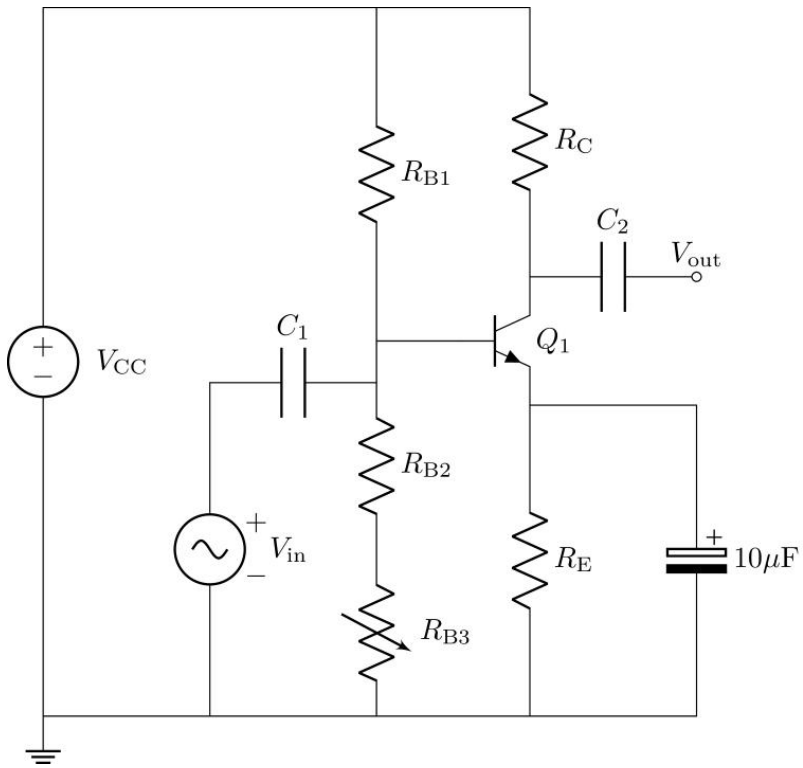
For AC signals, the large bypass capacitor (10 µF) presents a very low impedance at audio frequencies, effectively short-circuiting R_E. The emitter degeneration is therefore removed for AC, restoring the high small-signal gain. For DC, the capacitor is an open circuit, so the bias point and temperature stability are preserved.